Terminal Connection

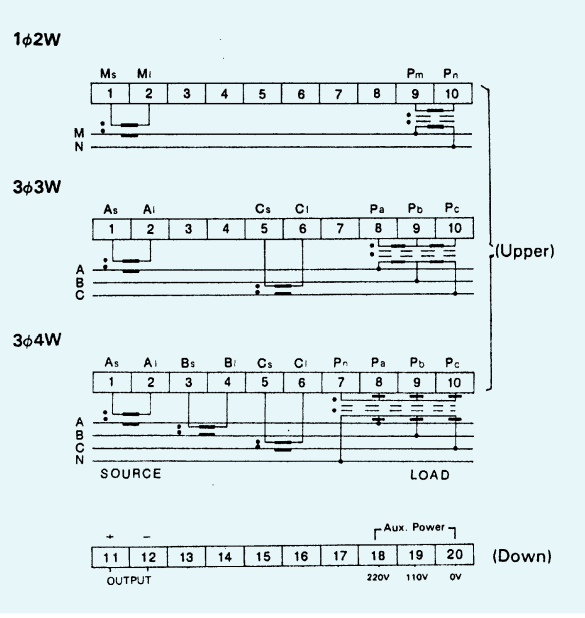
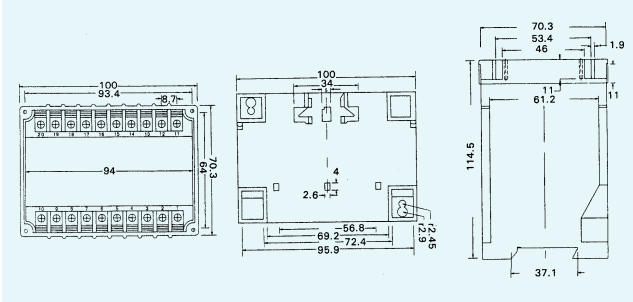
Dimension (unit: mm)